INSTALLATION DRAWING
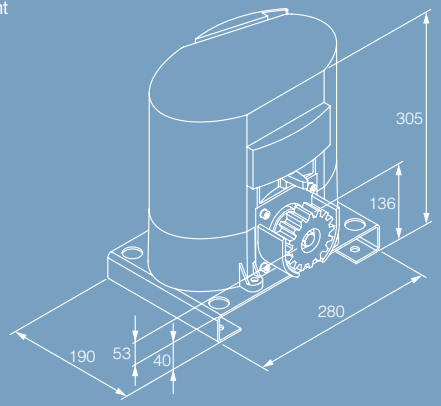
DIMENSIONS